Model DG
Combination Door-Grille

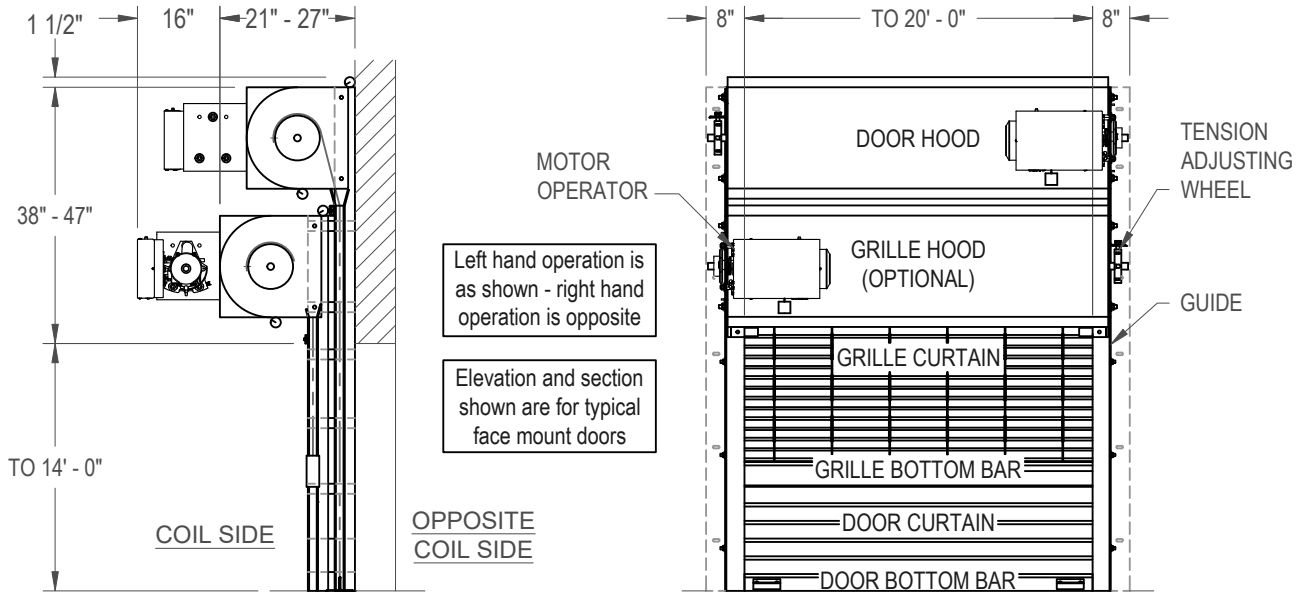

CURTAIN & BOTTOM BAR DETAILS

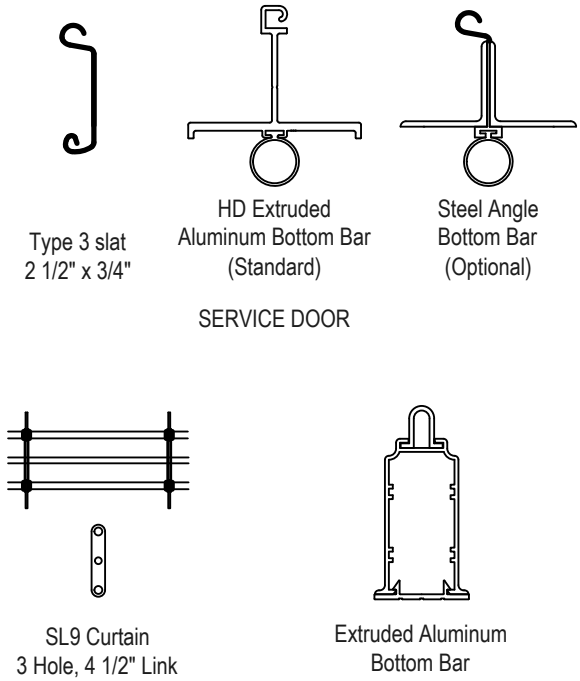

GUIDE DETAILS

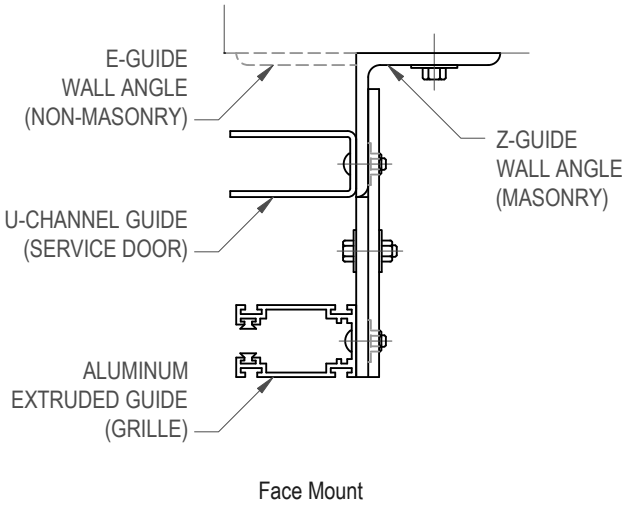

GENERAL NOTES:
Typical construction shown - Other curtain & bottom bars available. Consult factory for required clearance. Shop drawings for specific applications are available. Consult factory for larger doors and any information not shown.

©2022 Lawrence Roll-Up Doors, Inc. Lawrence Roll-Up Doors, Inc. reserves the right to change specifications without notice or obligation.

Toll Free (866) 939-3399 www.lawrencedoors.com Fax (626) 869-0841